VALVES
free of cavities & maintenance

engineered.
fast.
dynamic.

Type RO

Plug valves for seawater desalination

Product leaflet

Type RO

Plug valve with weld-ends for seawater desalination

- **Design optimized for in-line service**
- **double trunnion of the plug**

DN 50 - 600 / PN 100
NPS 2 - 24“ / Class 600
Range of application: -76 < T < 446°F / 608°F
vacuum-capable

Design characteristics

- body and plug made of Super-Duplex up to PREN 43
- trunnion mounted design with PEEK bearing
- complete chambering of sleeve
- maintenance-free, self-lubricating
- mounting-flange acc. to ISO 5211
- easy accessible adjustment of the plug

Options

- painting
- flushing device
- other materials

PT diagram, plug types, sealing systems, material selection, see catalogue part ENGINEERING

Further technical information, see industry brochure
SEAWATER DESALINATION

Design optimized for inline-service

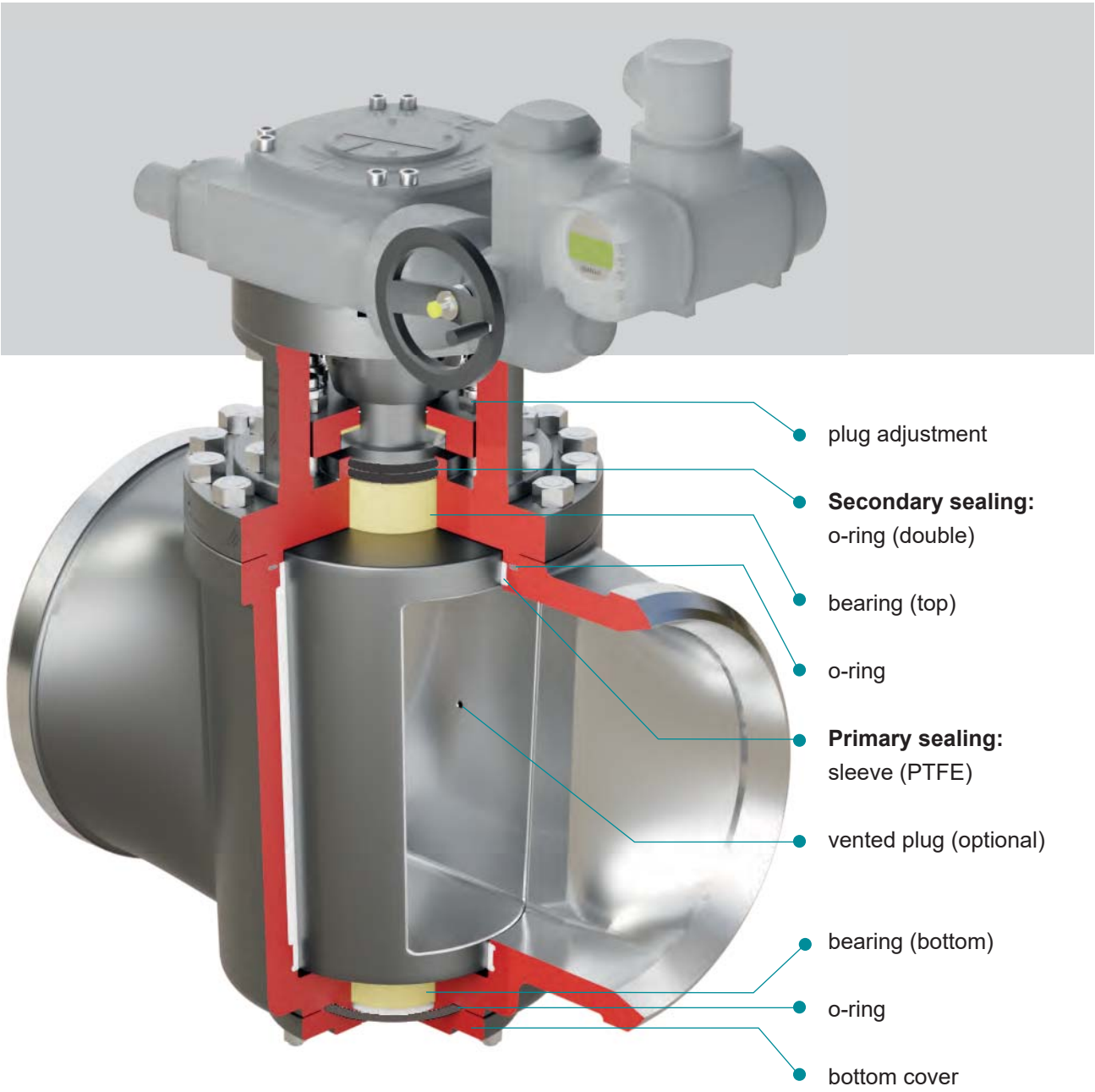

Durable

- Design optimized for inline-service
- sleeve chambering
- Made in Germany – since 1963

Plug valve benefits

- free of cavities
- large sealing surface
- constant torque (Δp independent !)
- double sealing (shut-off)
- protection of the plug sealing

Type RO
Technical information

DN 50 - DN250
without bottom cover

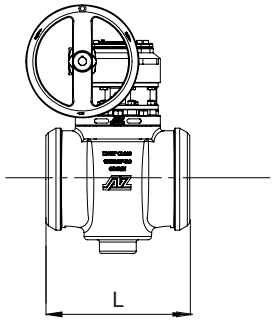

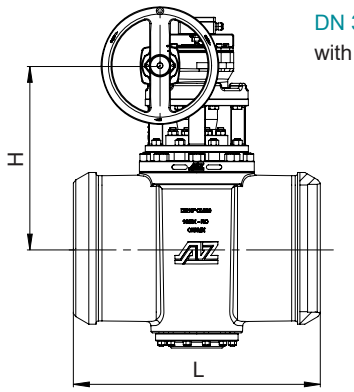

DN 300 - DN600
with bottom cover

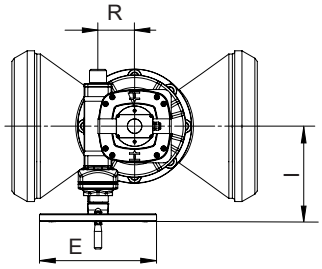

NPS	Class	L [mm] [Inch]	gearbox [mm] E [mm] [Inch]	R [mm] [Inch]	H [mm] [Inch]	I [mm] [Inch]	Type	torque* [Nm] [ft lb]	weight [kg] [lb]
6	600	559 22.00	400 15.75	85 3.35	297 11.69	290 11.42		1170 863	105 231
8	600	508 20.00	600 23.62	96,5 3.80	340 13.39	350 13.78		1560 1,151	130 286
10	600	508 20.00	600 23.62	137,5 5.41	395 15.55	465 18.31		1950 1,438	175 385
12	600	508 20.00	600 23.62	137,5 5.41	415 16.34	465 18.31		3380 2,493	205 451
14	600	639 25.16	600 23.62	137,5 5.41	485 19.09	465 18.31		3600 2,655	265 584
16	600	762 30.00	600 23.62	137,5 5.41	500 19.69	465 18.31		7150 5,273	480 1,058
18	600	838 33.00	400 15.75	125 4.92	620 24.41	325 12.80		7830 5,775	550 1,212
20	600	838 33.00	600 23.62	180 7.09	545 21.46	520 20.47		8320 6,136	790 1,741
22	600	914 35.98	600 23.62	180 7.09	655 25.79	550 21.65		13850 10,215	1060 2,336
24	600	1067 42.00	600 23.62	180 7.09	655 25.79	550 21.65		15150 11.174	1180 2,601

*) manufacturer recommended sizing torque (incl. 100% safety)

**) on request

All desalination plug valves are made of Super-Duplex, other on request

Other sizes and ratings on request

Engineering

Design
- free of cavities, adjustability, modular concept options

Sealing systems
- STD, FS, CA, FSN (-SL), CASN (-SL), SAFE-LINED, special

Fugitive emission
- Low-Emission Valves acc. to TA-Luft, ISO 15848 & API 641

Materials
- casting materials, forged and bar material, lining materials

PT-diagrams
- pressure, temperature, materials

Plug types
- for two-way and multi-way valves

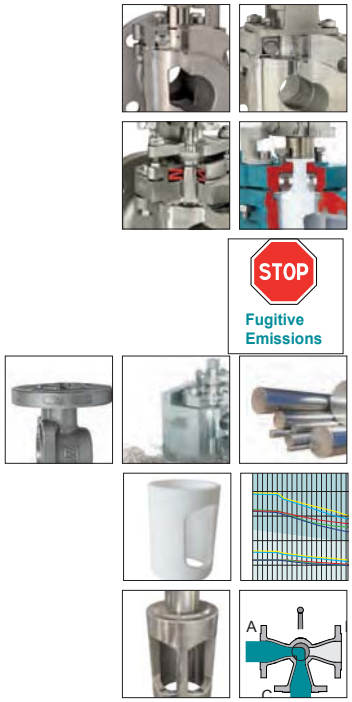

AZ-plug valve: the design principle

Key advantages

- free of cavities
- no contamination of process media
- adjustability of the plug and sealings
- maintenance-free due to self-lubricating and chemical-resistant PTFE-sleeve
- low emission design
- constant torque (Δp independent !)
- vacuum-capable

Tapered plug

- plug pressed into the PTFE-sleeve
- polished surface

Body

- tapered body interior
- integrated supporting ribs avoid rotation and coldflow of the sleeve
- large sealing surface

PTFE-sleeve

- mechanically locked into the valve body
- complete PTFE chambering
- robust, one-piece sleeve covers and protects the entire plug

Cavity-free – suitable for all media
Technical comparison

AZ-plug valve	Ball valve
Soft seated plug valve with PTFE-sleeve **Main sealing components** • metallic plug • sleeve 	**Soft seated ball valve with PTFE sealing rings, floating ball** **Main sealing components** • metallic ball • sealing rings
OPEN position	
• suitable for all media due to cavity-free design • sealing surfaces are completely protected 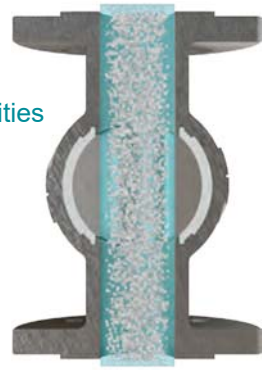	• critical for the following media due to design with cavities ○ corrosives: crevice corrosion ○ polymerizing: clogging ○ crystallizing: abrasion / clogging 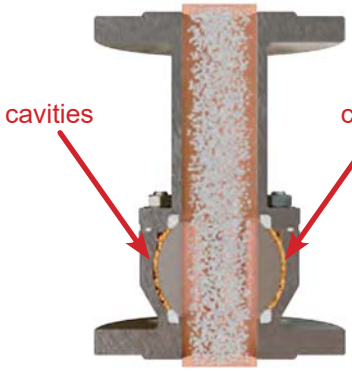
During operation	
• free of cavities, media cannot settle or be trapped • solids are pushed away • no contamination with old media 	• with cavities, media can settle or be trapped • solids cause abrasion of the sealing rings • contamination of process media 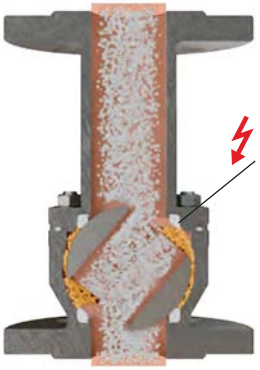

Safe and reliable tightness for years

Adjustable

- tapered plug design allows retightening of the sealing on site - if needed
- adjusting bolt even accesible with mounted actuator / gearbox

Several sealing steps to atmosphere

1. Primary: sleeve
2. Secondary: diaphragm / cover seal
3. Tertiary: stem packing (optional)

Detailed information about all certified AZ cover & stem sealing systems see chapter
SEALING SYSTEMS

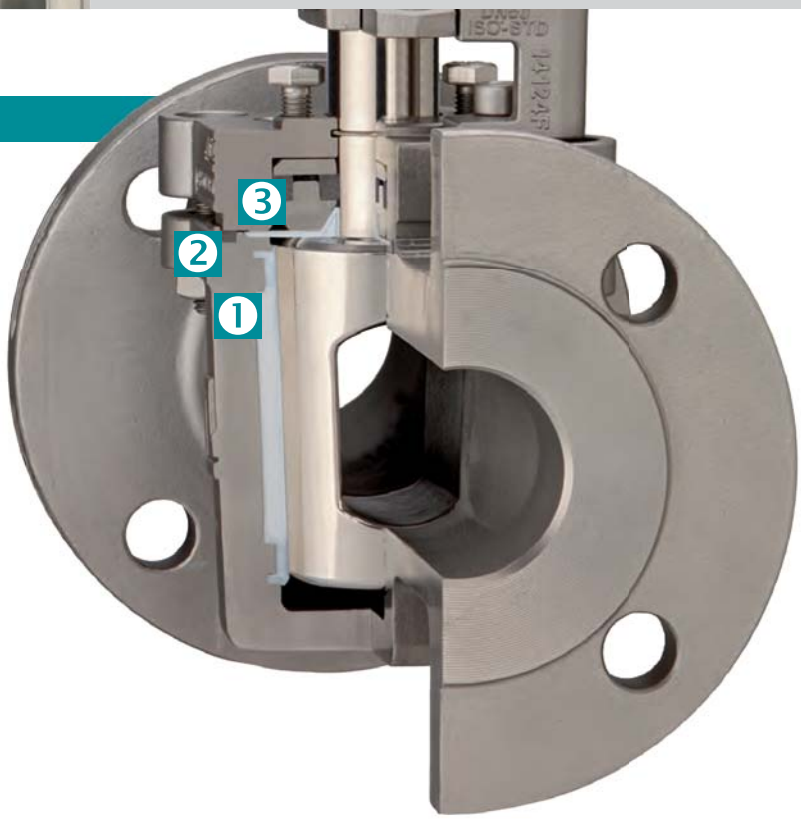

ISO cover

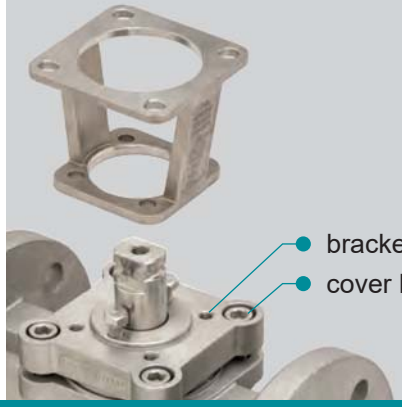

- pressure containing cover bolts separated from bracket boltings
- cover and bracket acc. to ISO 5211 for efficient actuator / gearbox assembly

Reduced and full bore design

Execution

Reduced bore
Type STANDARD

- compact valve (FF / weight)
- optimal torques for economic automation

Full round bore
Type EXTRA

- maximum flow rate
- minimal pressure drop
- piggable (optional)

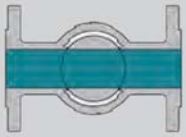

Type ISO-EXTRA

- excellent for abrasive, slurry and solid-containing applications
- maximum flow rate compared to other valve types with the same nominal size

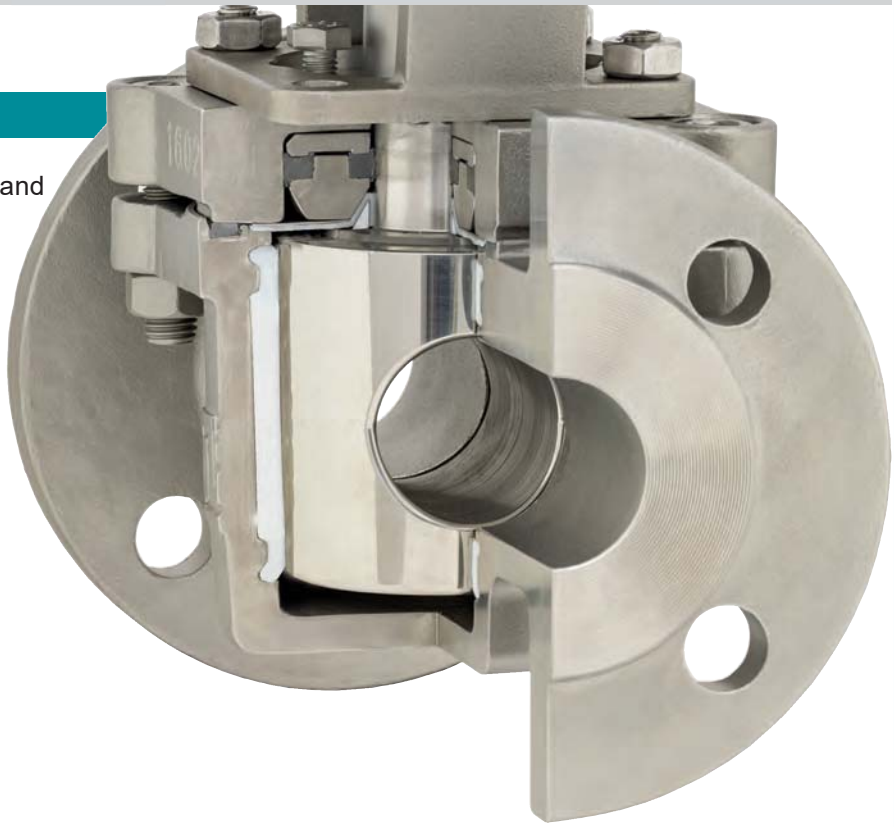

Maximum flow rate

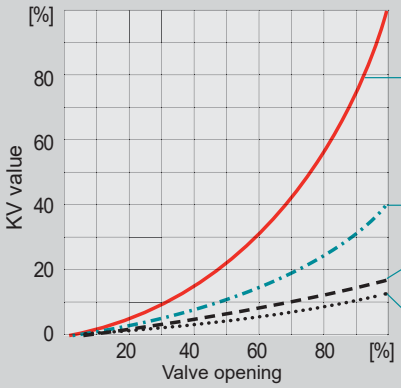

- Type ISO-EXTRA
- Type ISO-STANDARD
- typical high performance butterfly valve
- typical globe valve

Options

Multi-port

- whole range of multi-port plugs for all configurations (up to 7-way)
- horizontal and vertical installation

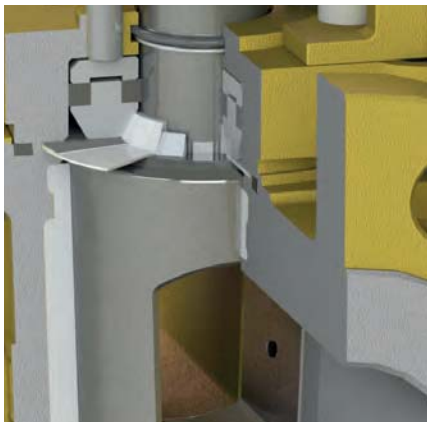

Vented options

- plug bottom
- plug upstream / downstream

automatic pressure balance in case of thermal media expansion

System requirements

- **FDA** = Food and Drug Administration certifications and compliant materials
- **GMP** = Good-Manufacturing-Practice
- **CIP** = Clean-in-Place
- Polished internal surfaces, surface finish <0.8 Ra µm (<32 Ra µin)
- oil and grease free
- water-free

All connections possible

- flanges acc. to ASME, JIS etc.
- welded ends
- screwed and threaded ends
- combinations of connections
- oversize flanges
- compression fittings and ferrule ring couplings
- special connections

High and low temperature

- extended bonnet with sealing at the top
- stem extension for insulated valves

Modular operation concept

Bracket according to ISO 5211

- standard installation of gearbox and actuator
- safe due to independent mounting of cover and bracket
- covering bonnet bolts to prevent opening of valve in service
- precise centering of the bracket to the plug stem due to adjusting ring
- easy inline plug adjustment during the process, screws are always accessible

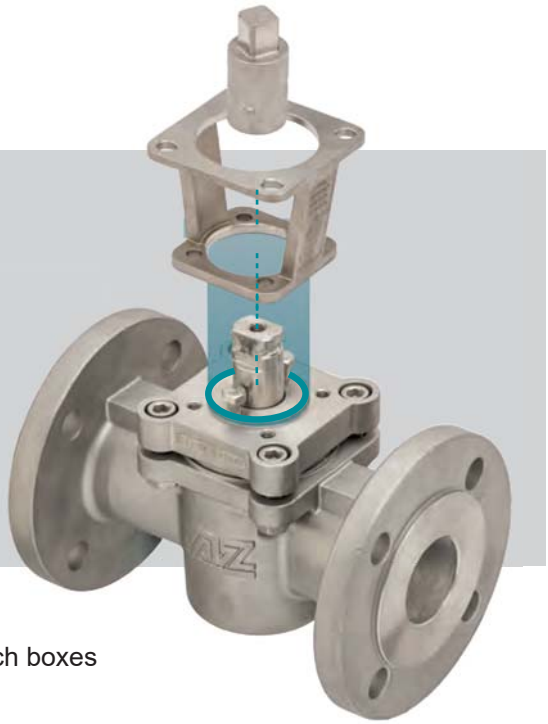

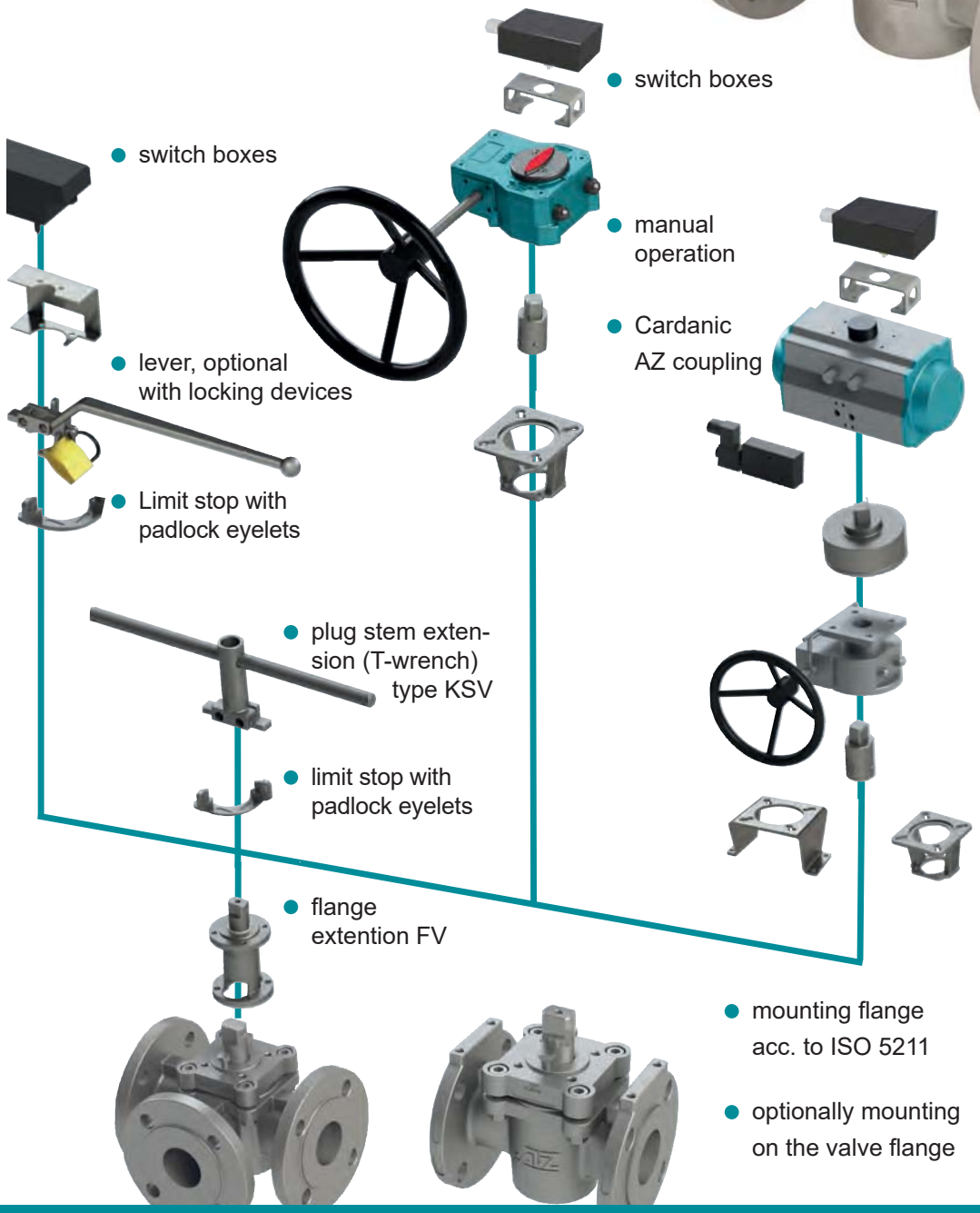

Cover and stem sealing systems suitable for general applications

Type STANDARD

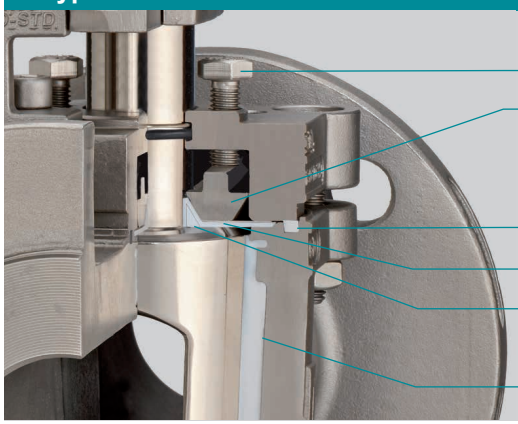

- plug adjustment
- thrust collar
- cover sealing (PTFE)
- stainless steel diaphragm
- **Secondary sealing**:
  V-diaphragm (PTFE), delta thrust collar (PTFE)
- **Primary sealing**: sleeve*

Type FS2 — Fire-Safe-sealing (API 607)

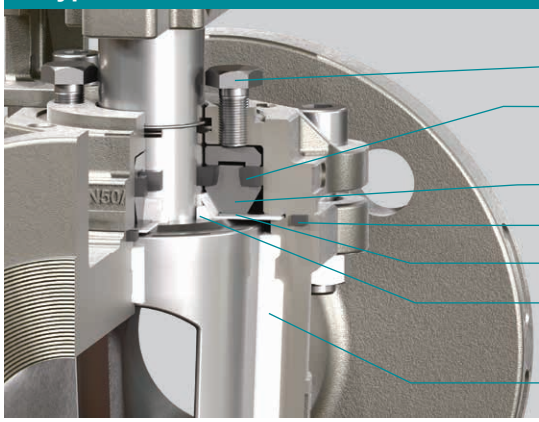

- plug & packing adjustment
- **Tertiary sealing**: Packing to atmosphere (graphite)
- thrust collar
- cover sealing (graphite)
- stainless steel diaphragm
- **Secondary sealing**:
  V-diaphragm (PTFE) and delta thrust collar (PTFE)
- **Primary sealing**: sleeve*

Type CA2 — Chemistry sealing

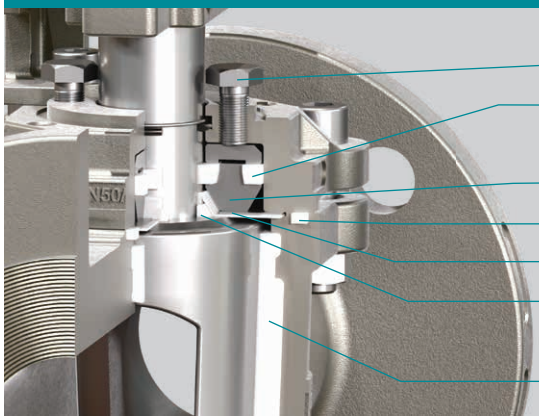

- plug & packing adjustment
- **Tertiary sealing**: Packing to atmosphere (PTFE)
- thrust collar
- cover sealing (PTFE)
- stainless steel diaphragm
- **Secondary sealing**:
  V-diaphragm, delta thrust collar (PTFE)
- **Primary sealing**: sleeve*

*) The sleeve material has a decisive influence on the maximum operating temperature
Material selection acc. to PT-diagram

More safety
for severe applications

engineered.
fast.
dynamic.

Type FSN — Fire-Safe-sealing (API 607)

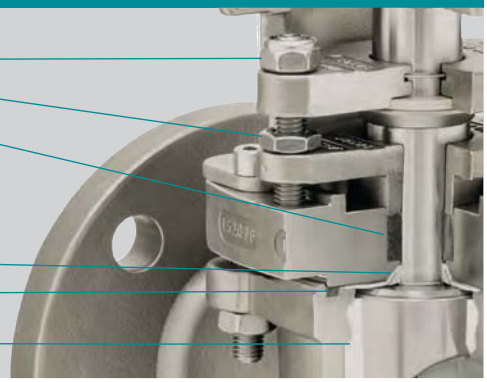

- plug adjustment
- triple safety stem packing adjustment
- **Tertiary sealing**: triple safety stem packing (graphite)
- **Secondary sealing**:
  - V-diaphragm (PTFE) and delta thrust collar(PTFE)
  - cover sealing (graphite)
- **Primary sealing**: sleeve*

Type FSN-EF — Fire-Safe-sealing (API 607)

NEW!

Emission Free

- plug adjustment
- triple safety stem packing adjustment
- **Quaternary sealing:** three o-rings at the stem
- **Tertiary sealing**: triple safety stem packing
- **Secondary sealing**:
  - V-diaphragm (PTFE) and delta thrust collar (PTFE)
  - cover sealing (graphite)
- **Primary sealing**: sleeve*

Type FSN-SL — Fire-Safe-sealing (API 607)

live-loaded

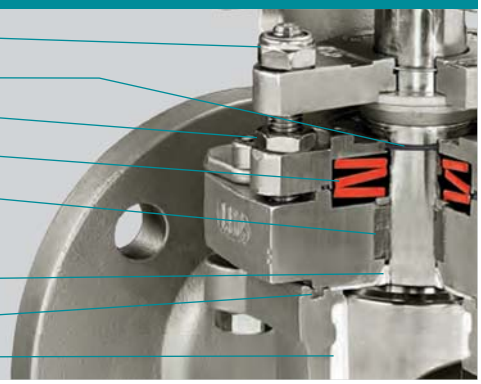

- plug adjustment
- o-rings protect the springs against corrosion
- triple safety stem packing adjustment
- disk springs (optionally made of Inconel)
- **Tertiary sealing**: triple safety stem packing (graphite)
- **Secondary sealing**:
  - V-diaphragm (PTFE) and delta thrust collar (PTFE)
  - cover sealing (graphite)
- **Primary sealing**: sleeve*

*) The sleeve material has a decisive influence on the maximum operating temperature
Material selection acc. to PT-diagram

Material for **type CASN** and **CASN-SL** chemistry safety sealing: packing and cover sealing in PTFE

Special sealing systems

Chevron packing

- increases the contact pressure (when pressure builds up on the safety stem packing towards stem)
- for toxic and fugitive media
- high wear resistance

Type CL Chlorine / gas applications

- approved for chlorine applications
- ideal for media with changing state of aggregate (e.g. liquid to gas, vice versa)
- vacuum capable

Detection / Grease ports for monitoring purpose of lethal gases (phosgene, etc.)

- detection ports for early recognition of potential leakages
- sniffing at sealing surfaces to atmosphere

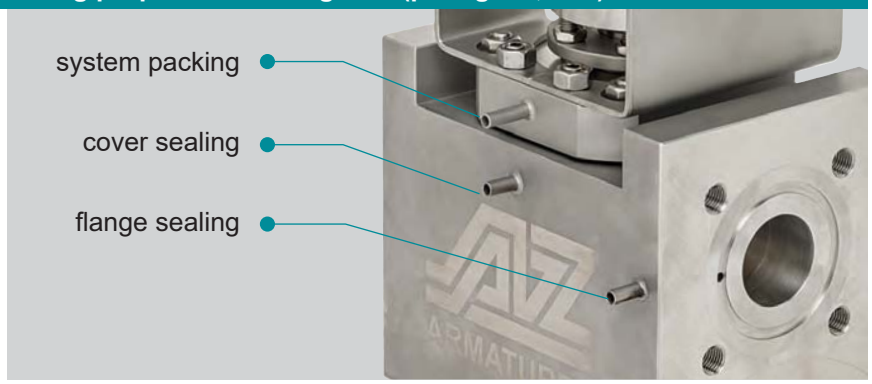

Type CA — Chemistry sealing

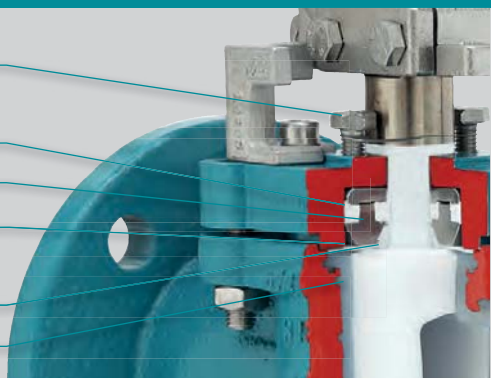

- plug & packing adjustment
- **Tertiary sealing**: Packing to atmosphere (PTFE)
- thrust collar
- stainless steel diaphragm
- **Secondary sealing**:
- V-diaphragm & delta thrust collar (PTFE)
- **Primary sealing**: lined body

Type SAFE-LINED — Chemistry sealing

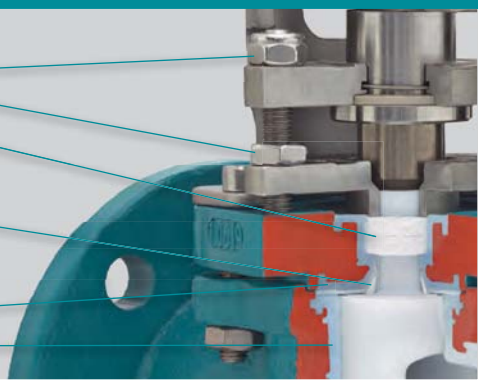

lined cover

- plug adjustment
- triple safety stem packing adjustment
- **Tertiary sealing**:
- triple safety stem packing (PTFE) to atmosphere
- **Secondary sealing**:
- V-diaphragm (PTFE), delta thrust collar (PTFE)
- lined cover
- **Primary sealing**: lined body*

Type SAFE-LINED-SL — Chemistry sealing

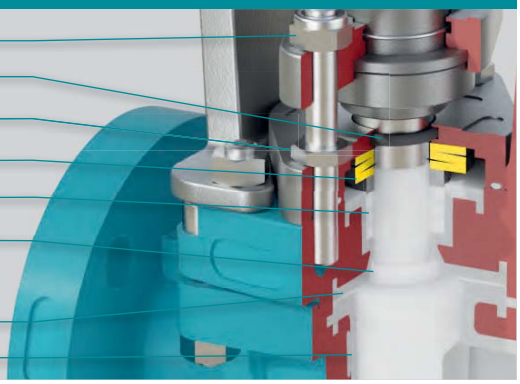

live-loaded

- plug adjustment
- o-rings protect the springs against corrosion
- triple safety stem packing adjustment
- disk springs (optionally made of Inconel)
- **Tertiary sealing**: triple safety stem packing (PTFE)
- **Secondary sealing**:
- V-diaphragm (PTFE), delta thrust collar (PTFE)
- lined cover
- **Primary sealing**: lined body*

*) Lining and plug material have a decisive influence on the maximum operating temperature
Material selection according to PT-diagram.

WORLD'S FIRST EMISSION FREE plug valve certified acc. to **ISO 15848-1 /** AH **Type FSN-EF**

NEW!

STOP

Fugitive Emissions

Low-Emission
according ISO 15848, TA-Luft & API 641

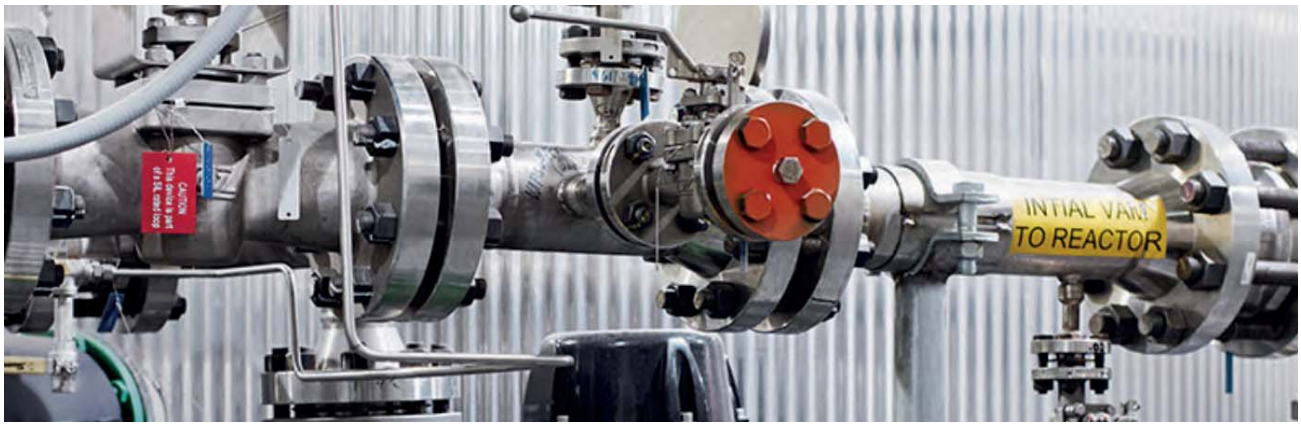

For all important information about ISO 15848, TA-Luft & API 641, as well as the current certificates, please refer to the "AZ Fugitive Emission" brochure

Latest information about ISO 15848 / API 641 / TA Luft see AZ Fugitive Emissions leaflet

Casting materials

		Casting Material					
Material Group	**Common Name**	**EN / DIN**	**Short name**	**Material-No.**	**ASTM**	**Grade**	**UNS**
Carbon Steel / Ductile Iron							
Ductile Iron	SG Iron	EN 1563	EN-GJS-400-18-LT	5.3103	A395	-	F32800
Carbon Steel	CS	EN 10213	GP240GH	1.0619	A216	WCB	J03002
Low Temp. Carbon Steel	LTCS	EN 10213	G17Mn5	1.1131	A352	LCB	J03003
Low Temp. Carbon Steel	LTCS	EN 10213	G21Mn5	1.1138	A352	LCC	J02505
Stainless Steel							
Stainless Steel	Duplex 2205	EN 10213	GX2CrNiMoN22-5-3(4A)	1.4470	A995	4A-CD3MN	J92205
Stainless Steel	Duplex 1B	EN 10213	GX3NiCrMoCuN26-6-3-3	1.4517	A995	1B-CD4MCuN	J93372
Austenitic	SS	EN 10213	GX5CrNi19-10	1.4308	A351	CF8	J92600
Austenitic	SS	EN 10213	GX2CrNi19-11	1.4309	A351L	CF3	J92700
Austenitic	SS	EN 10213	GX5CrNiMo19-11-2	1.4408	A351	CF8M	J92900
Austenitic	SS	EN 10213	GX2CrNiMo19-11-2	1.4409	A351	CF3M	J92800
Super Austenitic	Alloy 20	EN 10213	NiC420CuMo	1.4500	A351	CN7M	N08007
Super Austenitic	Alloy 20 mod.	EN 10213	GX2NiCrMoCuN25-20	1.4536	A743	CN7MS	J94650
Super Austenitic	AL6XN	-	-	-	A351	CN3MN	J94651
Superduplex	Superduplex 5A	EN 10213	25Cr-7Ni-Mo-N	1.4469	A995	CE3MN	J93404
Nickel Alloy							
	Monel/Alloy400	DIN 17730	G-NiCu30 Nb	2.4365	A494	M35-1	N24135
	Hastelloy C mod.	-	-	-	A494	CW6M	N30107
	Hastelloy C	-	-	2.4537	A494	CW12MW	N30002
	Hastelloy C-276	-	-	2.4883	-	-	-
	Hastelloy B-3	-	-	-	-	-	-
	Inconel 600	-	-	-	A494	CY40	N06040
	Inconel 625	-	-	-	A494	CW6MC	N26625
	Inconel 825	-	-	-	A494	CU5MCuC	N08826
	Nickel	DIN 17730	G-Ni 95	2.4170	A494	CZ100	N02100
Other Material Groups							
Tantanlum	Tantalum	-	-	-	-	-	-
Titanium	Ti 2	DIN 17865	G-Ti 2	3.7031	B367	C-2	R52550
Zirconium	Zirconium 702	-	-	-	B752	702C	-
Zirconium	Zirconium 705	-	-	-		705C	-

All rights reserved, all indications without engagement, subject to modifications.
The use of these equivalents has to be evaluated on a case-by-case basis.
Other materials on request.

Similar forged and bar materials

			Similar Forged Material						Bar Material	
Common Name	**Mat.Nr.**	**Grade**	**EN / DIN**	**Short Name**	**Mat.Nr.**	**ASTM**	**Grade**	**UNS**	**ASTM**	**Short**
Carbon Steel / Ductile Iron										
SG Iron	5.3103	-	EN 1563	EN-GJS-400-18-LT	5.3103	A395-99	60-40-18	-	-	-
CS	1.0619	WCB	EN 10213	GP240GH	1.0619	A105	A105	-	-	-
LTCS	1.1131	LCB	-	-	-	A350	LF2-Class1	G10300	-	-
LTCS	1.1138	LCC	-	-	1.0566	A350	LF2-Class1	G10250	-	-
Stainless Steel										
Duplex 2205	1.4470	4A-CD3MN	EN 10028-7	X2CrNiMoN22-5-3	1.4462	A182	F51	S32205	A479	S31803
Duplex 1B	1.4517	1B-CD4MCuN	EN 10028-7	X2CrNiMoCuN25-5-3	1.4507	A182	F59	S32520	A479	S32550
SS	1.4308	CF8	EN 10028-7	X5CrNi18-10	1.4301	A182	F304	S30400	A276	304
SS	1.4309	CF3	EN 10028-7	X2CrNi19-11	1.4306	A182	F304L	S30403	A276	304L
SS	1.4408	CF8M	EN 10028-7	X5C4NiMo17-12-2	1.4401	A182	F316	S31600	A276	316
SS	1.4409	CF3M	EN 10028-7	X2CrNiMo 17-12	1.4404	A182	316L	S31603	A276	316L
Alloy 20	1.4500	CN7M	-	-	2.4660	B462	N08020	N08020	B473	N08020
Alloy 20 mod.	1.4536	CN7MS	-	-	-	-	-	-	-	-
AL6XN	-	CN3MN	EN 10028-7	X1NiCrMoCuN25-20-7	1.4529	A182	F62	N08367	B462	N08367
Superduplex 5A	1.4469	CE3MN	EN 10028-7	X2CrNiMoN25-7-4	1.4410	A182	F63	S32615	-	-
Nickel Alloy										
Monel/Alloy400	2.4365	M35-1	DN 17744	NiCu30Fe	2.4360	B165	Alloy 400	N04400	B164	N04400
Hastelloy C mod.	-	CW6M	-	-	-	A494	-	-	-	-
Hastelloy C		CW12MW	-	NiMo16CrW	-	A494	-	-	-	-
Hastelloy C-276		-	DIN 17744	NiMo16Cr15W	2.4819	B565	N10675	N10276	B574	N10276
Hastelloy B-3	-	-	DIN 17744	NiMo29Cr	2.4600	B565	N10675	N10675	B335	N10675
Inconel 600	-	CY40	DIN 17742	NiCr15Fe	2.4816	B565	N06600	N06600	B166	N06600
Inconel 625	-	CW6MC	DIN 17744	NiCr22Mo9Nb	2.4856	B565	N06625	N06625	B446	N06625
Inconel 825	-	CU5MCuC	DIN 17744	NiCr21Mo	2.4858	B564	N08825	N08825	B425	N08825
Nickel	2.4170	CZ100	-	-	-	-	-	-	B160	N02200
Other Material Groups										
Tantalum	-	-				B365	TaW2,5	R05252	-	-
Ti 2	3.7031	C-2	DIN 17864	Grade 2	3.7035	B381	F2	R50400	B348	Grade 2
Zirconium 702	-	702C	-	-	6.0702	B493	R60702	R60702	B550	R60702
Zirconium 705	-	705C	-	-	-	B493	R60705	R60705	B550	R60705

All rights reserved, all indications without engagement, subject to modifications.

The use of these equivalents has to be evaluated on a case-by-case basis.

Other materials on request.

Lining materials

Lining materials

The high density, extremely resistant lining is at least 3 mm thick. New granulate is used exclusively, no refurbished regenerates or similar materials.

Fluoropolymer lining materials

- Body: PFA, PFA conductive and FEP
- Plug: PTFE, PFA, PFA conductive and FEP

Combination of linings		
body lining	plug lining	T_{max}
PFA	PTFE [1]) or special materials	210°C / 410°F
PFA	PFA	200°C / 392°F
PFA	FEP	150°C / 302°F
PFA conductive	PFA conductive	125°C / 257°F
FEP	FEP	150°C / 302°F
FEP	PFA	150°C / 302°F

1) Plugs with PTFE lining only for two-way valves up to DN 100.
Plugs for multi-way valves not with PTFE lining available.

IMPORTANT NOTE

For demanding conditions, such as process temperatures exceeding 150°C / 302°F:
Valve size, media phase, plug position & temperature (constant or fluctuating) may have an impact on the lifetime. Consult factory for proper selection of lining material, cover sealing type and special features.

Sleeve materials

Category	Sleev Material	Characteristics	Typical applications	T_{MAX}
PTFE	PTFE, virgin	low friction, very good sealing characteristic	standard sleeve material for most applications	230°C / 446°F
RPTFE	PTFE-Glass	reinforced PTFE	additional stability for multiway valves with horizontal ports	230°C / 446°F
	PTFE-Graphite	reinforced PTFE	high temperature applications	250°C / 482°F
modified PTFE	TFM 1600* NXT 75* M 111*	chemically modified PTFE, reduced permeation, low friction	chemical applications where reduced permeability compared to PTFE is required	250°C / 482°F
Special Sleeves	PTFE-P* NFCE* NCS*	high performance sleeve materials	severe service highest temperatures, high pressure, abrasive applications	320°C / 608°F
PFA	PFA	reduced permeation	chemical applications where reduced permeability compared to PTFE is required	200°C / 392°F
UHMW-PE	UHMW-PE	Ultra High Molecular Weight Polyethylene	radiation resistent, abrasive application	80°C / 176°F

*) sleeve material selection depending on availability at AZ manufacturing site

IMPORTANT NOTE

for demanding conditions, such as process temperatures exceeding 200°C / 392°F:
Valve size, media phase, plug position & temperature (constant or fluctuating) may have an impact on the lifetime. Consult factory for proper selection of sleeve material, cover sealing type and special features. For other sleeve materials not listed above: please contact your AZ sales representative.

PT Diagram - Class 150 - Class 600 for PTFE sleeved plug valves

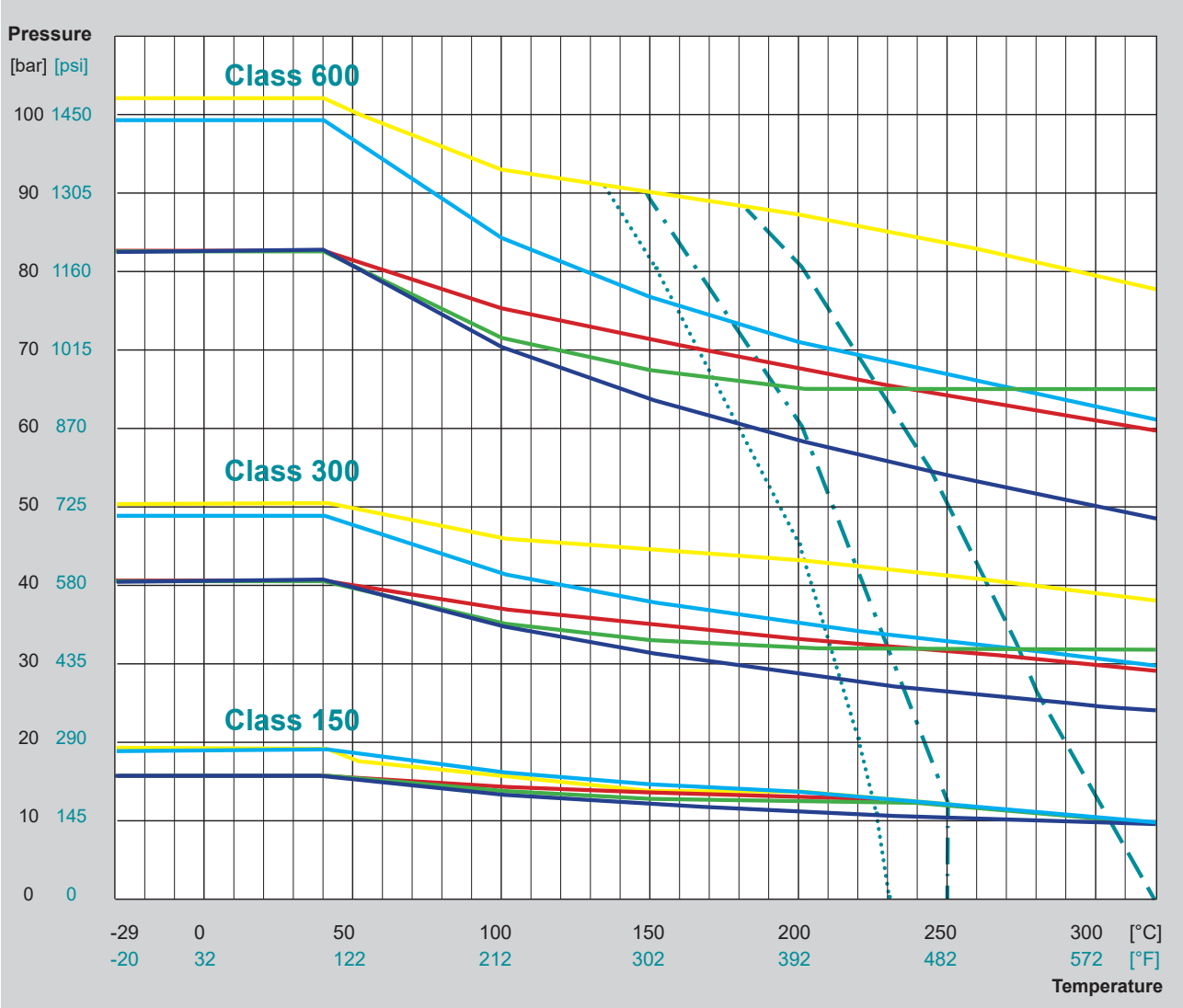

Body material

- ASTM A216 - WCB
- ASTM A351 - CF8M
- ASTM A494 - CW12MW / Hastelloy
- ASTM A494 - M35.1 / Monel 400
- ASTM A351 - CN7M Alloy 20

other body materials on request

Sleeve material

PTFE (virgin) / PTFE (glass)	T_{max} 230°C / 446°F
TFM / NXT / M111 / PTFE graphite	T_{max} 250°C / 482°F
PTFE-P / NFCE / NCS	T_{max} 320°C / 608°F

other sleeve materials on request

Subject to technical change without notice.

The data given are max. values according to ASME B16.34.

IMPORTANT NOTE

for demanding conditions, such as process temperatures exceeding 200°C / 392°F: Valve size, media phase, plug position & temperature (constant or fluctuating) may have an impact on the lifetime. Consult factory for proper selection of sleeve material, cover sealing type and special features.

For temperatures < -29°C / -20°F, (T_{limit} = -60°C / -76°F) operating temperature, low-temperature carbon steel or austenitic stainless steels are required.

PT Diagram High Pressure - Class 900
PTFE sleeved plug valves with trunnion mounted design

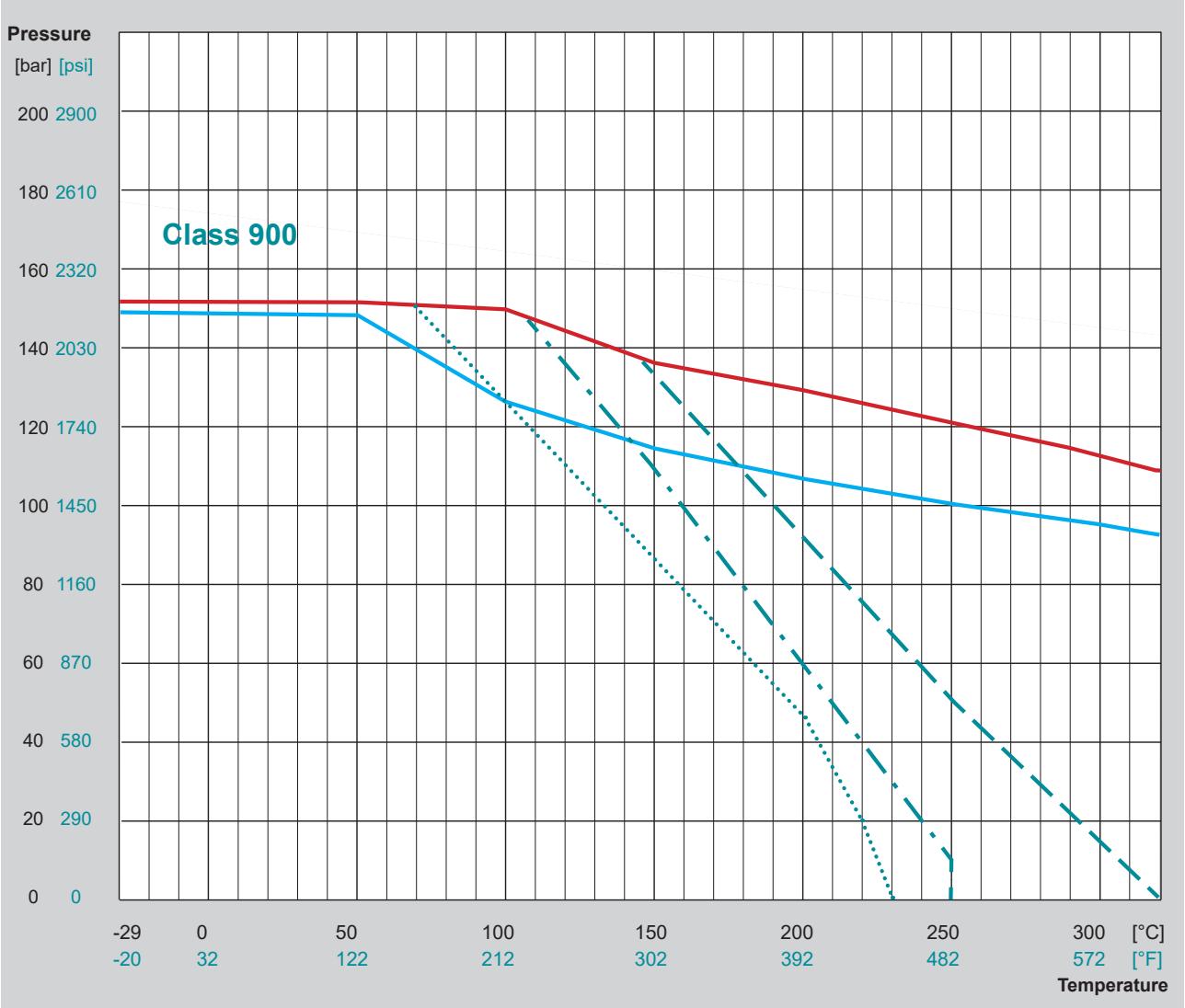

Body material (in line with ASME B16.34)

- ASTM A351 - CF8M / Stainless Steel
- ASTM A995 - CD3MN / Superduplex

other body materials on request

Sleeve material

- PTFE (virgin) / PTFE (glass) T_{max} 230°C / 446°F
- TFM / NXT / M111 / PTFE graphite T_{max} 250°C / 482°F
- PTFE-P / NFCE / NCS T_{max} 320°C / 608°F

other sleeve materials on request

Subject to technical change without notice.

The data given are max. values according to ASME B16.34.

IMPORTANT NOTE

for demanding conditions, such as process temperatures exceeding 200°C / 392°F: Valve size, media phase, plug position & temperature (constant or fluctuating) may have an impact on the lifetime. Consult factory for proper selection of sleeve material, cover sealing type and special features.

For temperatures < -29°C / -20°F, (T_{limit} = -60°C / -76°F) operating temperature, low-temperature carbon steel or austenitic stainless steels are required.

PT Diagramm, Class 150 - Class 300 lined valves

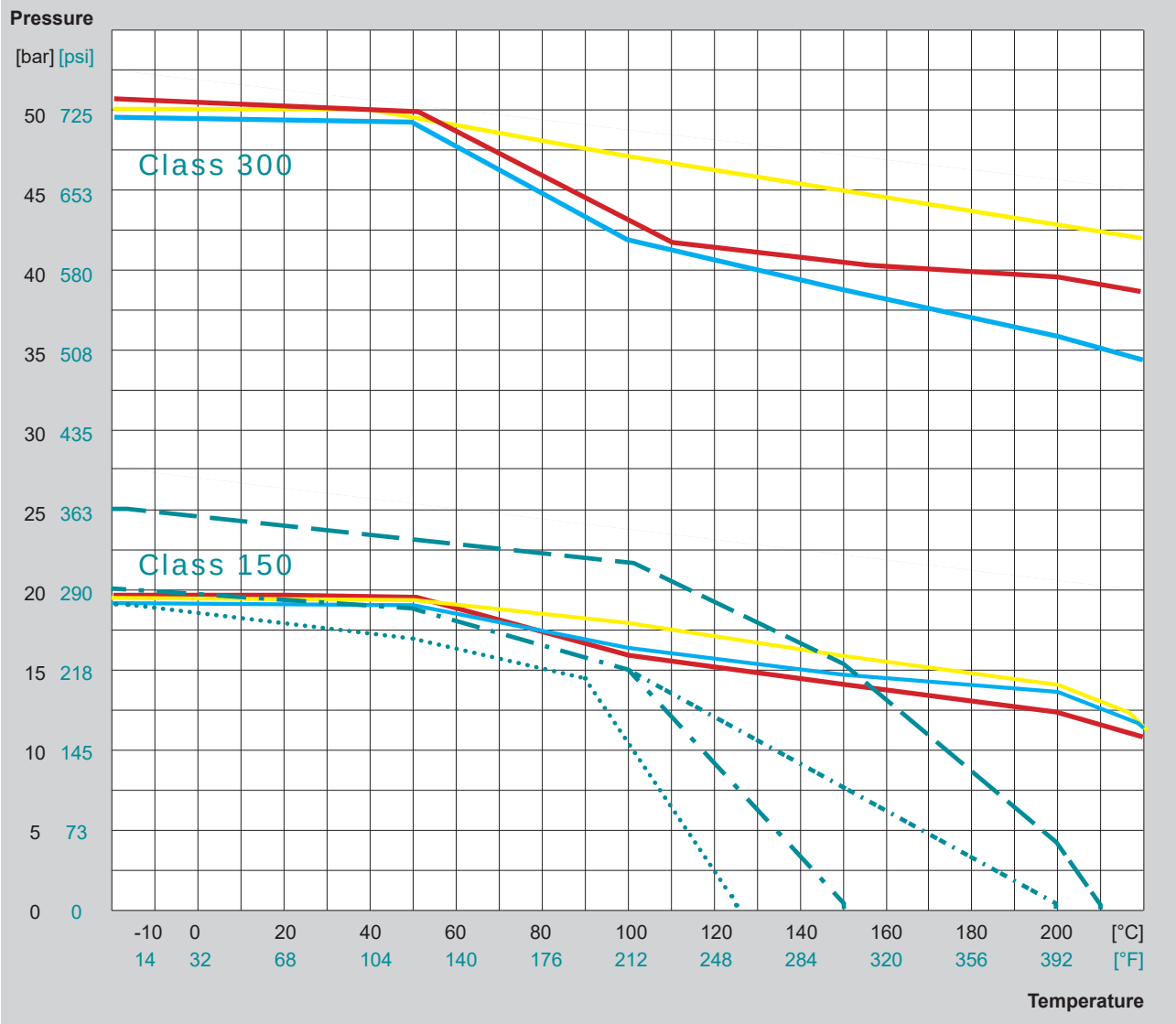

Body material

- ASTM A216 - WCB
- ASTM A351 - CF8M / Stainless Steel
- ASTM A395 / Ductile Iron

other body materials on request

Lining combination

	Body	Plug / Ball	T_{MAX}
	PFA	PTFE or special*	210°C / 410°F
	PFA	PFA	200°C / 392°F
	all combinations with PFA and FEP		150°C / 302°F
	PFA conductive	PFA conductive**	125°C / 257°F

*) Special materials (metallic) for plugs without lining on request

**) Material combination PFA / FEP possible

Maximum breakaway torque depending on material combinations according to the technical data sheets of the plug valve.
Subject to technical change without notice.

The data given are max. values according to EN 12516-4.

IMPORTANT NOTE

for demanding conditions, such as process temperatures exceeding 150°C / 302°F: Valve size, media phase, plug position & temperature (constant or fluctuating) may have an impact on the lifetime. Consult factory for proper selection of lining material, cover sealing type and special features.

Plug types: two-way and multi-way for standard reduced and full bore design

- position indicator for all multi-way valves welded on lever or stem extension
- Lined plug valves: multi-way plugs only with PFA / FEP plug lining or made of special materials. Two-way plugs with PTFE lining up to DN 100 / NPS 4 available

Recommendation for three-way valves type F-3-S with vertical outlet (longer life-time compared to type F-3-W with horizontal outlet)

Options

Plugs made of special materials or special designs, e.g. with flushing devices, vent holes in plug bottom or plug upstream / downstream side

2-way	Plug type	Pos. I = 0°	Pos. II = 90°	Pos. III = 180°	Pos. IV = 270°
Type F-2-ISO-STANDARD	D	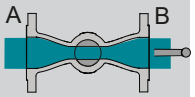	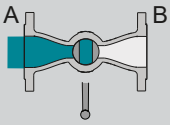		
Type F-2-ISO-STANDARD-A	T4*	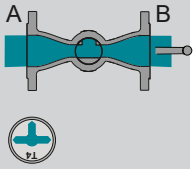	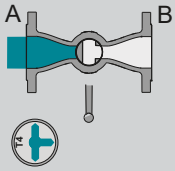		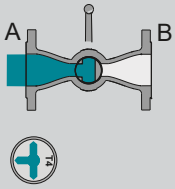

*) For highly expanding media AZ recommends the "i-plug" (relief hole and open plug buttom)

Plug types: 3-way valve for STANDARD and EXTRA design

Plug type	Pos. I = 0°	Pos. II = 90°	Pos. III = 180°	Pos. IV = 270°	3-way (vertical)
L	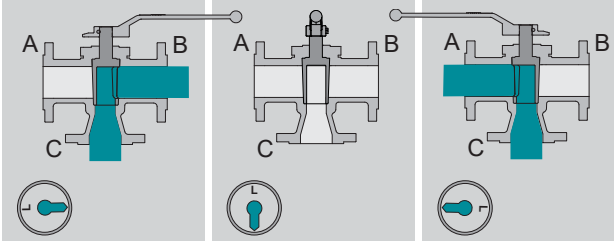				Type F-3-S-ISO-STANDARD
LL	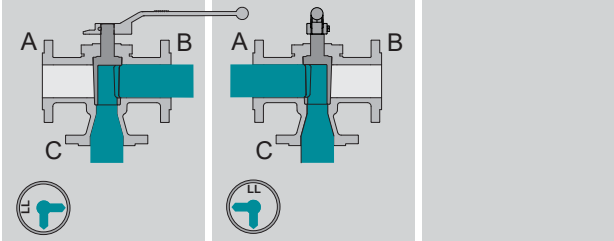				Type F-3-S-ISO-STANDARD-A
IL*	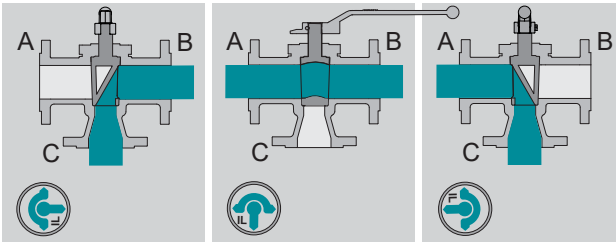				
TT	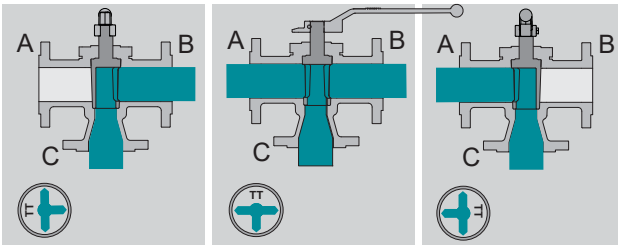				

Plug type	Pos. I = 0°	Pos. II = 90°	Pos. III = 180°	Pos. IV = 270°	3-way (horizontal)
T4	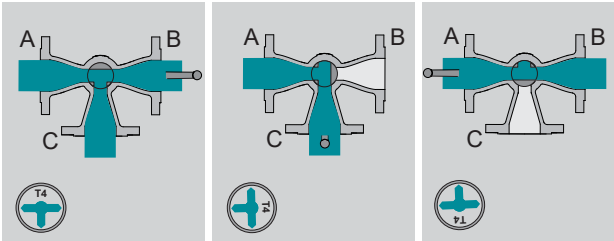				Type **F-3-W-ISO-STANDARD**
L4	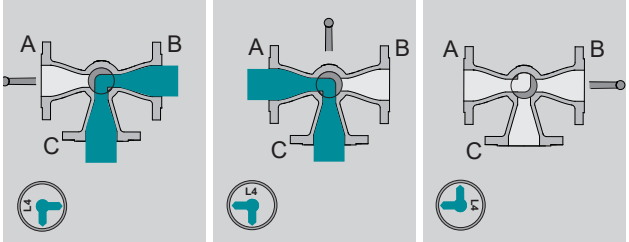				Type **F-3-W-ISO-STANDARD-A**

*) for EXTRA valves with IL-plug, F-3-W-EXTRA with T4-plug is recommended (higher flowrate)
Lined valves: the IL-plug is only available in special materials

Plug types 3-way (120°) valves and 4-way valves for STANDARD and EXTRA design

3-way (120°) type 3-W-120:

- min. cross section guaranteed (switching phase)
- piggable execution on request
- minimum flow guaranteed

transflow design

3-way (120°) type 3-WP-120

- with positive overlap
- flow interruption / isolation

positive overlap

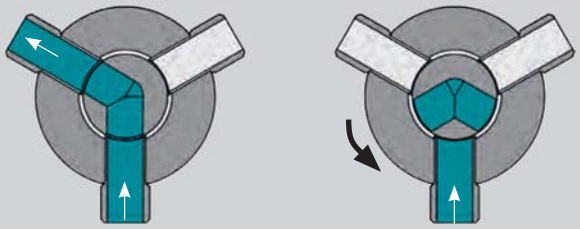

3-way (120°)	Plug type	Pos. I = 0°	Pos. II = 120°	Pos. III = 240°	
	L120	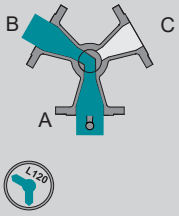	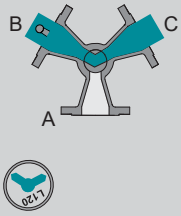	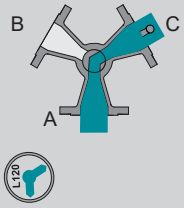	

4-way	Plug type	Pos. I = 0°	Pos. II = 90°	Pos. III = 180°	Pos. IV = 270°
Type F-4-ISO-STANDARD	L4	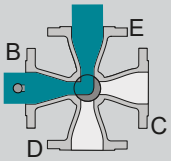 ✓ B-E ✗ C-D	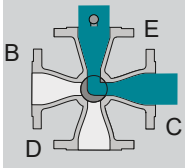 ✗ B-D ✓ C-E	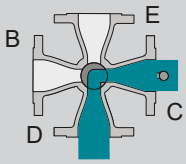 ✗ B-E ✓ C-D	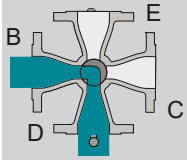 ✗ C-E ✓ B-D
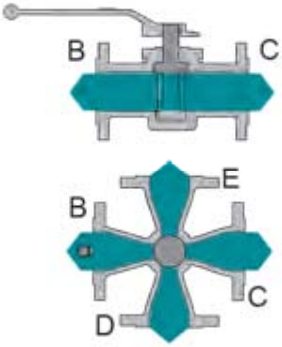	T4	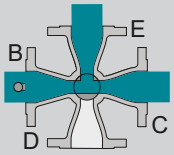 ✗ D ✓ B-C-E	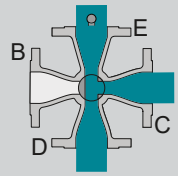 ✗ B ✓ C-D-E	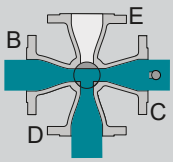 ✗ E ✓ B-C-D	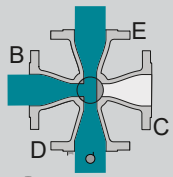 ✗ C ✓ B-D-E
	LL4	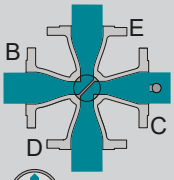 ✓ B-E + C-D	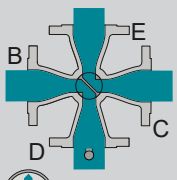 ✓ B-D + C-E		

✓ opened
✗ closed

Plug types 4-way (special) and 5-way valves for STANDARD and EXTRA design

Plug type	Pos. I = 0°	Pos. II = 90°	Pos. III = 180°	Pos. IV = 270°	4-way (special) / 5-way
L	✗ C-D-E ✓ A-B	✗ B-C-D ✓ A-E	✗ B-D-E ✓ A-C	✗ B-C-E ✓ A-D	
LL	✗ C-D ✓ A-B-E	✗ B-D ✓ A-C-E	✗ B-E ✓ A-C-D	✗ C-E ✓ A-B-D	
IL	✗ D ✓ A-E + B-C	✗ B ✓ A-C + D-E	✗ E ✓ A-D + B-C	✗ C ✓ A-B + D-E	
T	✗ D-E ✓ A-B-C	✗ B-C ✓ A-D-E	✗ D-E ✓ A-B-C	✗ B-C ✓ A-D-E	
TT	✗ E ✓ A-B-C-D	✗ C ✓ A-B-D-E	✗ D ✓ A-B-C-E	✗ B ✓ A-C-D-E	

Type F-4-Special-ISO-STANDARD

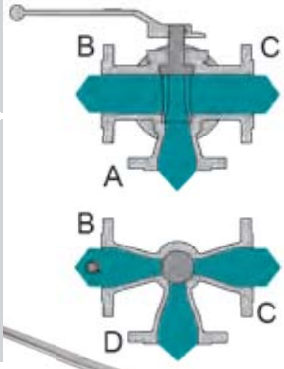

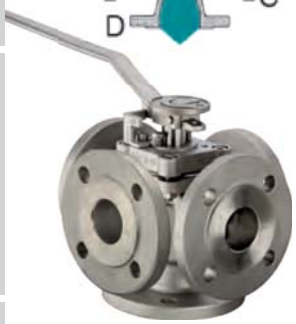

Type F-5-ISO-STANDARD

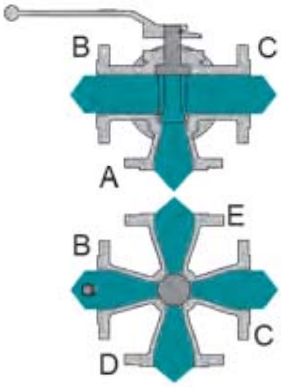

✓ opened
✗ closed

VALVES
free of cavities & maintenance

Your partner for highest demands!

Complete Catalog
Edition 2025

AZ plants

Headquarters Germany
AZ Armaturen GmbH
Waldstrasse 7
D-78087 Moenchweiler
Phone: +49 / 7721 / 7504-0
sales@az-armaturen.com
www.az-armaturen.com

Plant USA
AZ VALVES North America L.P.
18702 Intercontinental Crossing Drive
Houston, TX 77073
Phone: +1 / 832 / 827 2163
sales@azvalves.com
www.azvalves.com

Plant Brazil
AZ Armaturen do Brasil LTDA.
Av. Osvaldo Berto, 600
CEP 13255-405 Itatiba - SP
Phone: +55 / 11 / 452499-50 / -51
az@az-armaturen.com.br
www.az-armaturen.com.br

Plant China
AZ Armaturen (Taicang) Co., Ltd.
No. 1 Zhengzhou Road
215400 Taicang City
Phone: +86 / 512 / 53667600
info@az-armaturen.cn
www.az-armaturen.cn

Plant South Africa
AZ Armaturen South Africa PTY LTD.
28 Derick Coetzee Street
Boksburg 1459
Phone: +27 / 11 / 3973665
sales@az-armaturen.co.za
www.az-armaturen.co.za

AZ services

America
- USA (Houston/TX)
- Brazil (São Paulo, Itatiba & Belem)
- Chile (Santiago de Chile)
- Mexico (Mexico-City)
- Peru (Lima)

Europe
- Germany (Moenchweiler & Rhineland)
- France (Lyon/ Bourg-lès-Valence)
- Great Britain (York/Roecliffe)
- Italy (Milan/Caltignaga)
- Poland (Warsaw/Opoczno)
- The Netherlands (Amsterdam)

Asia
- China (Taicang)
- South Korea
- Thailand (Rayong)
- Vietnam (Hanoi)

Africa
- South Africa (Johannesburg)

Detailed addresses on our website
www.azvalves.com

Rev 1 - 11.2024- 0,5 - US - Subject to technical change without notice