F-3 ISO-STANDARD

Three way plug valve with ISO-top flange

DIN-EN: DN 15 – 600 / PN 10 – 40
ASME: NPS ½“ – 24“ / class 150 – 300
PT range: -40 < T < 230/280°C, vacuum 10-8 mbar

Design Features

Design Characteristics

- free of cavities
- maintenance free – self lubricating
- mounting-flange for actuators acc. to DIN ISO 5211
- easy accessible adjustment of the plug, even with mounted actuator
- vacuum tight
- fugitive emmission resp. clean air act certified (TA-Luft 2002 approval)
- Directive 2014/68/EU
- Firesafe design API 607 ISO 10497
- FDA conformity

PT-Diagram

General Pressure-Temperature-Diagram

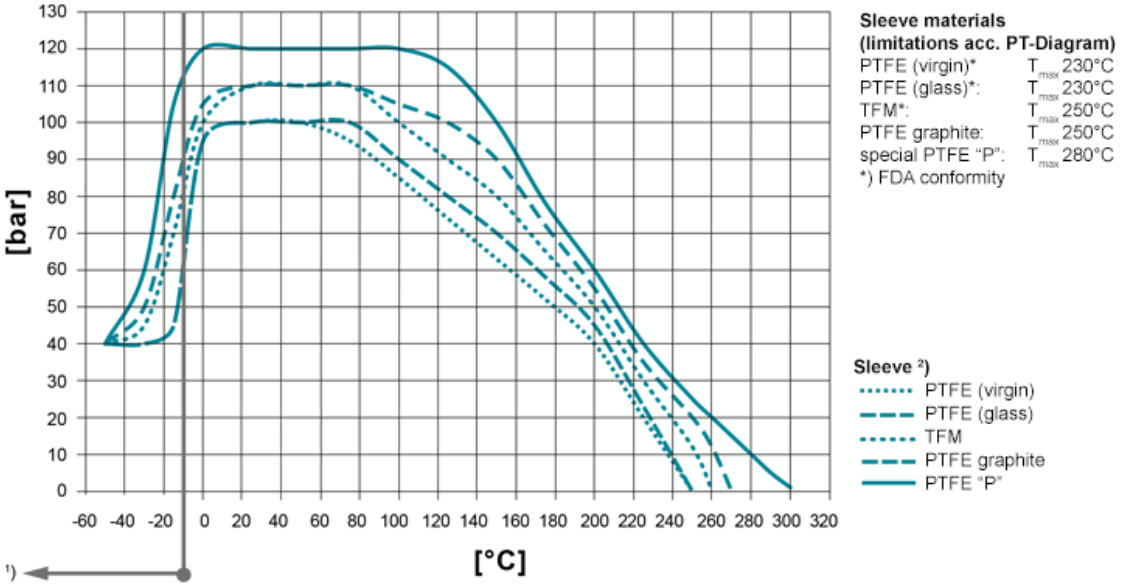

Operating temperatures < -30°C and > 220 °C have to be checked and approved by AZ according to the operating conditions.

Besides the P/T value of the sleeve the limitations of the valve bodies also have to be considered. Please refer to the EN 12516-1 resp. ASME B16.34 in order to choose a proper pressure rating (PN/class). The shown values refer to austenitic stainless steel 1.4408 (A351 Gr. CF8M).

1) For operating temperatures below -10°C low temperature / austenitic steels are required.
2) Sleeve: There are different sleeve materials / compounds available.

Materials

Standard body materials
- Stainless Steel 1.4408, ASTM A351 CF8M
- Stainless Steel 1.4308, ASTM A351 CF8
- Unalloyed stainless steel casting (low Temp.) 1.1138, LCC/LCB/A352

Standard plug materials
- Stainless Steel 1.4408, ASTM A351 CF8M
- Stainless Steel 1.4308, ASTM A351 CF8

Special materials
- Alloy
- Monel
- Nickel
- Zirconium

- Titan
- Tantal
- other materials on request

Sealing

Standard sealing for all major applications; Tmax 230°C

Type STD

read more [...]

Firesafe sealing (API 607) with graphite packing for additional
stem sealing; Tmax 230°C

Type FS

read more [...]

Chemical sealing to prevent fugitive emission of aggressive and toxic media
with PTFE packing for additional stem sealing; T_{max} 230°C

Type CA

read more [...]

Firesafe safety sealing (API 607) for fluctuating temperatures
with 3x graphite packing (adjustable) for additional stem sealing; Tmax 280°C

Type FSN

read more [...]

Firesafe safety sealing (API 607) for fluctuating temperatures
with 3x graphite packing (live loaded disc springs) for additional
stem sealing; Tmax 280°C

Type FSN-SL

read more [...]

Chemical safety sealing for fluctuating temperatures
with 3x PTFE packing (adjustment) for additional stem sealing;
Tmax 230°C

Type CASN

read more [...]

Chemical safety sealing for fluctuation temperatures
with 3x PTFE packing (live loaded disc springs) for additional stem sealing; Tmax 230°C

Type CASN-SL

read more [...]

Port Forms

AZ plug valves are fitted with cast, rust proof position indicators.
The position indicator is securely welded to the lever to prevent it from working loose.

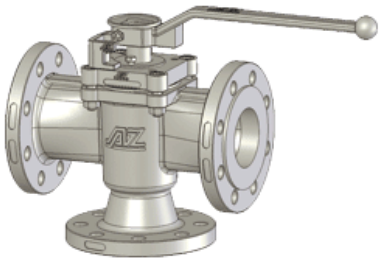

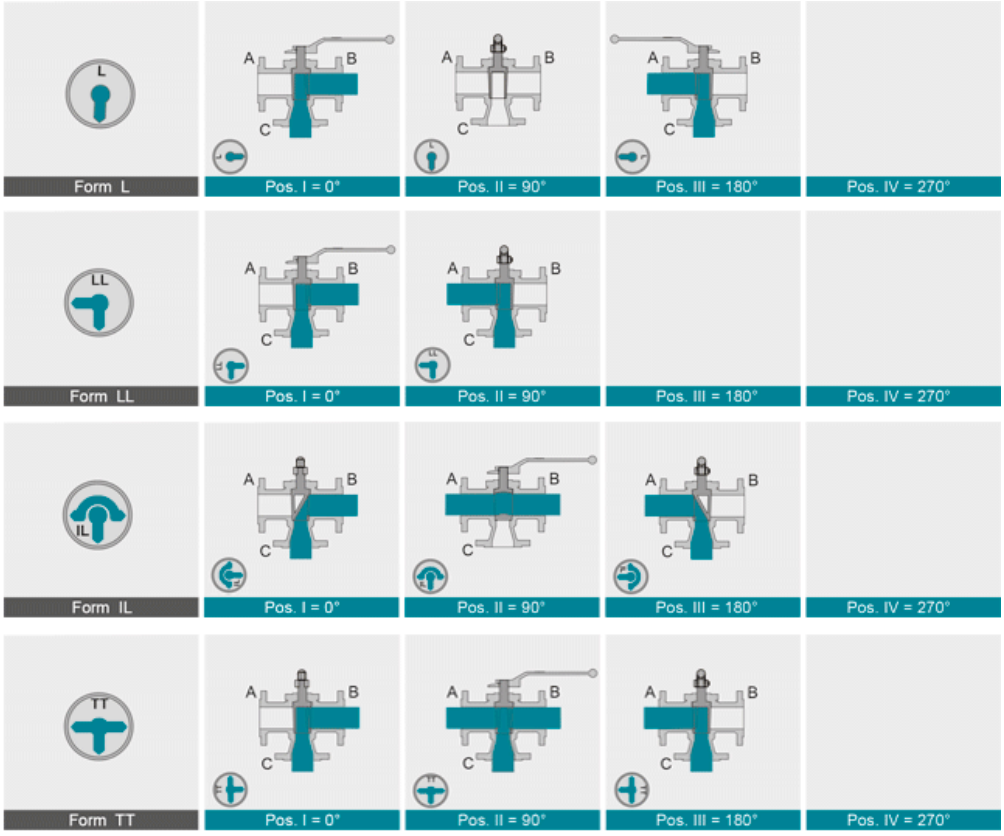
L
Form L
Pos. I = 0°
Pos. II = 90°
Pos. III = 180°
Pos. IV = 270°
LL
Form LL
Pos. I = 0°
Pos. II = 90°
Pos. III = 180°
Pos. IV = 270°
IL
Form IL
Pos. I = 0°
Pos. II = 90°
Pos. III = 180°
Pos. IV = 270°
TT
Form TT
Pos. I = 0°
Pos. II = 90°
Pos. III = 180°
Pos. IV = 270°
A
B
C

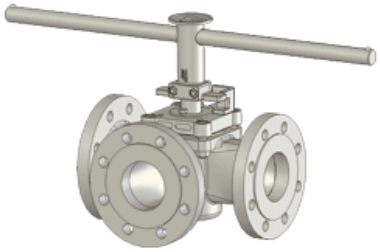

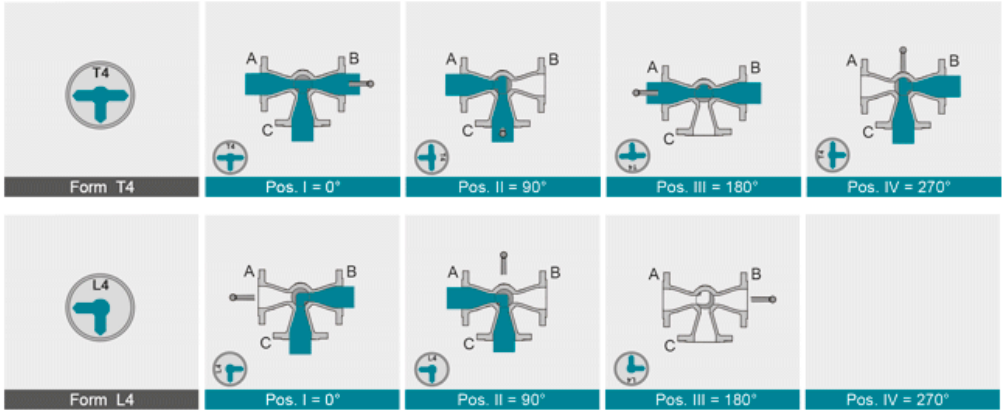
T4
Form T4
Pos. I = 0°
Pos. II = 90°
Pos. III = 180°
Pos. IV = 270°
L4
Form L4
Pos. I = 0°
Pos. II = 90°
Pos. III = 180°
Pos. IV = 270°
A
B
C

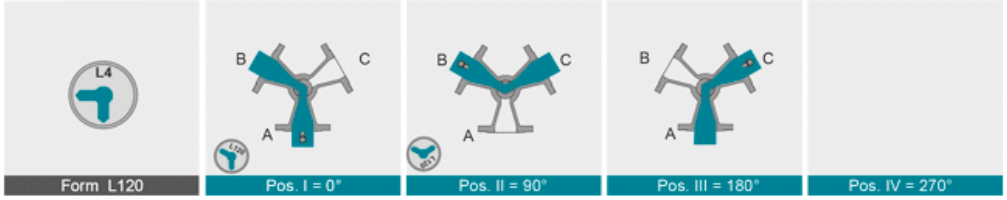
L4
Form L120
Pos. I = 0°
Pos. II = 90°
Pos. III = 180°
Pos. IV = 270°
A
B
C

Dimensions

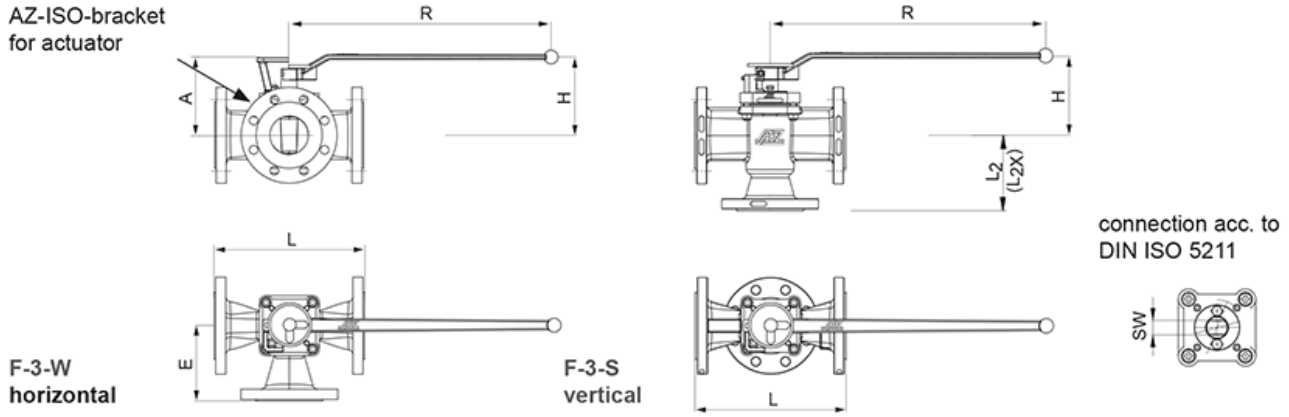

DIN EN 1092-1 / 588-1

DN	PN	L	L_2/E	L_{2X}	bracket / lever A	bracket / lever H	bracket / lever R	flange Type	dihe-dron	torque [Nm]*	weight [kg]**	K_{vs}-value [m³/h]**	C_v-value [US.gal/min]**
15	10-40	130	65	***	88	103	200	F05	11	30	4	10	12
20	10-40	150	75	***	88	103	200	F05	11	30	5	6	7
25	10-40	160	80	***	94	109	200	F05	11	30	6	8	9
25X	10-40	160	80	***	102	117	320	F07	14	70	8,5	18	21
32	10-40	180	90	***	102	117	320	F07	14	70	10,5	28	32
40	10-40	200	100	***	109	124	320	F07	14	80	17	55	64
50	10-40	230	115	***	139	159	420	F07	19	120	20	89	103
65	10-40	290	145	***	158	165	600	F10	22	200	26	99	115
80	10-40	310	155	***	158	165	600	F10	22	200	28	164	190
100	10-16 25-40	350 350	175	***	158	165	600	F10	22	200	27	60	69
100S	10-16 25-40	350 350	175	***	173	180	600	F10	22	300	32	147	169

ASME B 16.5 / 16.10

NPS	class	L	L_2/E	L_{2X}	bracket / lever A	bracket / lever H	bracket / lever R	flange Type	dihe-dron	torque [Nm]*	weight [kg]**	K_{vs}-value [m³/h]**	C_v-value [US.gal/min]**
½“	150 300	108 140	54 70	70 ***	88	103	200	F05	11	30	3,5 4	10	11,7
¾“	150 300	117 152	59 76	73 ***	88	103	200	F05	11	30	3,4 5	6	7
1“	150 300	127 165	64 83	89 ***	94	109	200	F05	11	30	4,3 6	8	9
1½“	150 300	165 190	82,5 95	105 ***	102	124	320	F07	14	80	7,9 10,5	28	32
2“	150 300	178 216	89 108	114 ***	139	159	420	F07	19	120	12,3 17	55	64
2½“	150	290	145	***	158	165	600	F10	22	200	20	99	115
3“	150 300	203 282	102 142	130 ***	158	165	600	F10	22	200	20 26	99	115
4“	150 300	228 305	152,5 171,5	*** ***	158	165	600	F10	22	200	22 27	60	69
4“S	150 300	228 305	152,5 171,5	*** ***	158	180	600	F10	22	300	28 32	147	169

* inclusive 100% safety factor for actuators
** F-3-S valid for L, LL form of the plug
*** on request

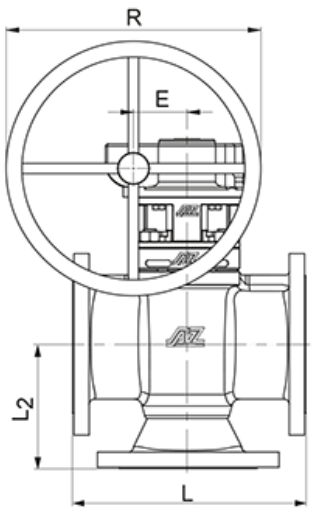

F-3-S
senkrecht

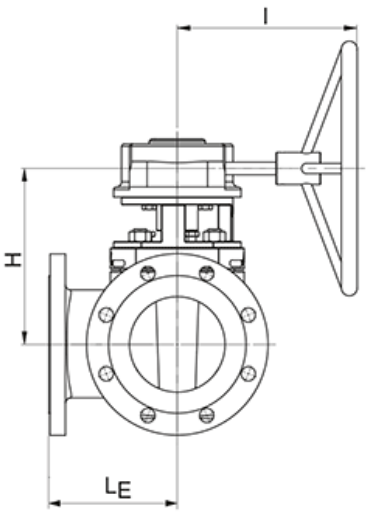

F-3-W
waagerecht

Anschluss nach
DIN EN ISO 5211

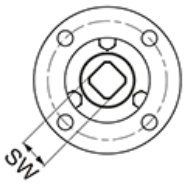

DIN EN 1092-1 / 588-1

DN	PN	L	L_2	L_E	E	gear (Pro-Gear) R	H	I	Type	DIN flange	dihe-dron	torque [Nm]*	weight [kg]**	K_{VS}-value [m³/h]**	C_V-value [US.gal/min]**
125	10-16 25-40	325	162	162	84	400	277	290	Q1500-S	F12	36	900	73 ***	284	329
150	10-16 25-40	350	200	175	84	400	277	290	Q1500-S	F12	36	900	85 ***	304	353
200	10-16 25 40	400	220	200	96,5	600	320	350	Q3000-S	F14	36	1200	130 ***	527	611
250	10 16 25 40	450	275	225	137,5	600	372	465	Q6500-S	F16	46	1500	172 ***	650	754
300	10 16 25 40	500	325	250	137,5	600	392	465	Q6500-S	F16	46	2600	182 ***	1100	1276
350	10 16 25 40	381 550	***	***	137,5	600	460	465	Q6500-S	F25	55	5500	225 ***	1491	1729
400	10 16 25 40	406 600	***	***	137,5	600	460	465	Q6500-S	F25	55	5500	330 ***	2082	2415
450	10 16 25 40	650	***	***	180	600	485	520	Q12000-S	F25	55	6400	***	***	***
500	10 16 25 40	700	***	***	180	600	510	520	Q12000-S	F25	55	7500	***	***	***

ASME B 16.5 / 16.10

NPS	class	L	L_2	L_E	E	gear (Pro-Gear) R	H	I	Type	DIN flange	dihe-dron	torque [Nm]*	weight [kg]**	K_{VS}-value [m³/h]**	C_V-value [US.gal/min]**
5“	150 300	254 325	178 163	127 162	84	400	277	290	Q1500-S	F12	27	900	*** 73	284	329
6“	150 300	267 403	191 216	133 201	84	400	277	290	Q1500-S	F12	27	900	74 85	304	353
8“	150 300	292 419	228 254	146 209	96,5	600	320	350	Q3000-S	F14	36	1200	105 130	527	611
10“	150 300	330 457	311	165 228	137,5	600	372	465	Q6500-S	F16	46	1500	146 172	650	754
12“	150 300	356 502	349 356	178 251	137,5	600	392	465	Q6500-S	F16	46	2600	184 182	1100	1276
14“	150 300	381/686 762	***	***	137,5	600	460	465	Q6500-S	F25	55	5500	219 225	1491	1729
16“	150 300	406 600	***	***	137,5	600	460	465	Q6500-S	F25	55	5500	279 330	2082	2415
18“	150 300	864 914	***	***	180	600	485	520	Q12000-S	F25	55	6400	***	***	***
20“	150 300	914 991	***	***	180	600	510	520	Q12000-S	F25	55	7500	***	***	***

* inclusive 100% safety factor for actuators
** F-3-S valid for L, LL form of the plug
*** on request

For geometric reasons, threads are used in the flange bores in a few cases

Actuation

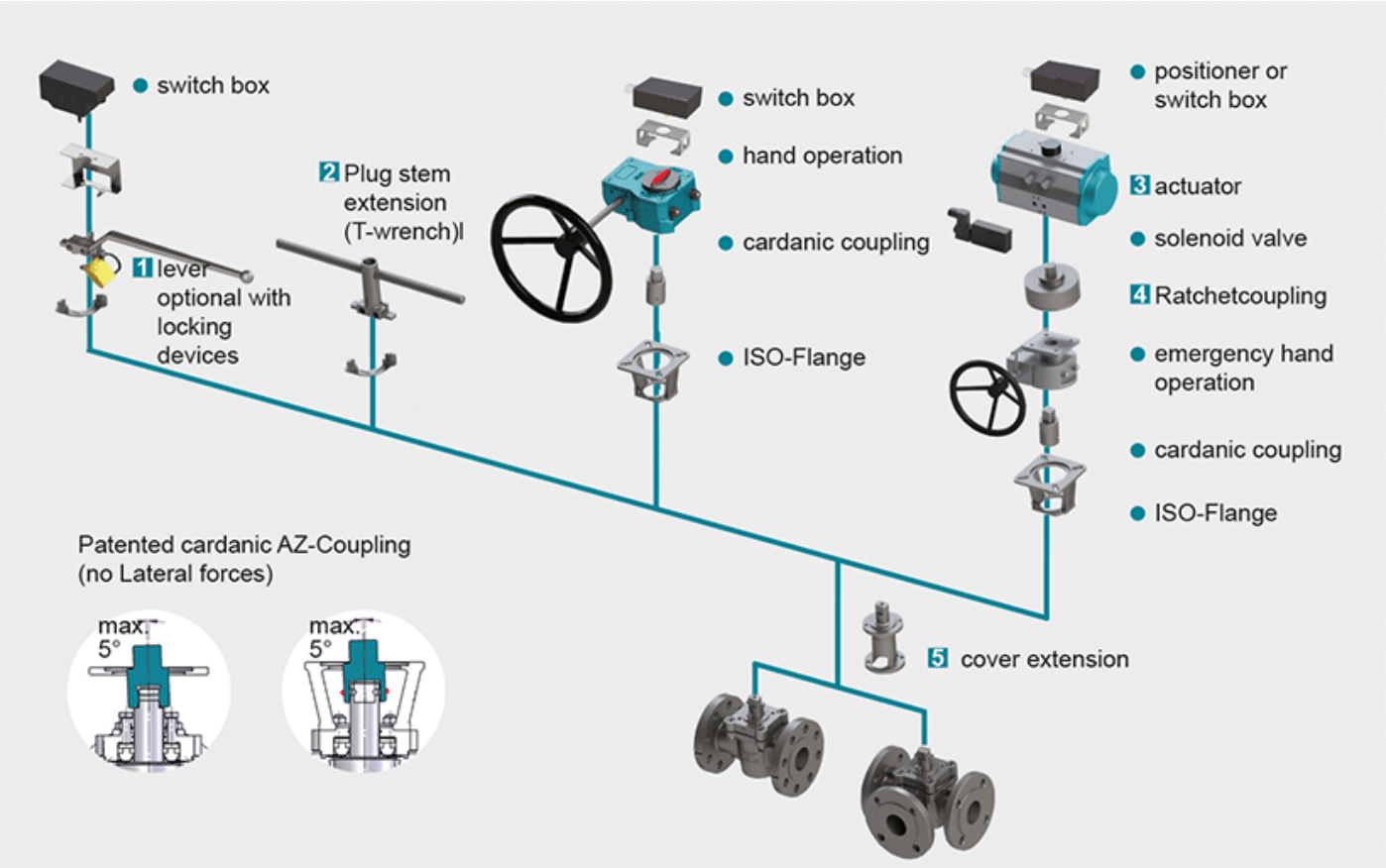

1 Locking Devices
Pilot valve combinations, pad lock eyelets, linear key conception, indexing plunger arrestor.
read more [...]

2 Plug stem extension
Solid construction in stainless steel with T-wrench, Standard extension 100 mm or 150 mm, non standard lengths are available on request
read more [...]

3 Actuators
Actuators for mounting-flange acc. to DIN ISO 5211
read more [...]

NEW: Pneumatic actuator AIR GEAR for plug valves with high torque ≥150.000 Nm
read more [...]

4 Ratched coupling
To usw on multiport valves with standard 90° actuator for bigger switchpositions than 90°
read more [...]

5 Cover extension
Solid construction in stainless steel, Standard extension 100 mm or 150 mm high, non standard lengths are available on request . Hexagonal bolts on adjustment ring freely accessible. Note: Don't use with sealing

FSN/FSN-SL and CASN/CASN-SL
read more […]